Prater-Sterling 2 SAMMONS COURT BOLINGBROOK, IL 60440	G6HFS HAMMERMILL 284TS MOTOR & FEED INLET	DATE: 7/31/02	BY: CJE	NUMBER: SK-2028-20
		SCALE: 1/16=1	APP:	

REV	DESCRIPTION	DATE	BY

THIS DRAWING IS THE PROPERTY OF PRATER-STERLING, WHO CLAIMS PROPRIETARY RIGHTS IN THE MATERIAL DISCLOSED. IT IS ISSUED IN CONFIDENCE FOR ENGINEERING INFORMATION ONLY AND MAY NOT BE COPIED OR USED FOR MANUFACTURE OF ANYTHING SHOWN WITHOUT SPECIFIC WRITTEN PERMISSION FROM PRATER-STERLING.

CONFIDENTIAL

CONFIDENTIAL

DISCHARGE FLANGE

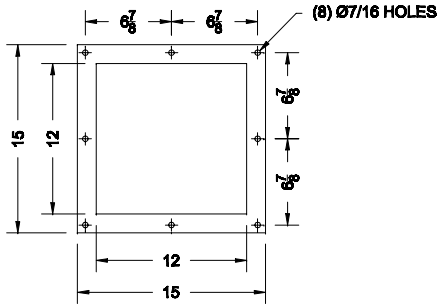
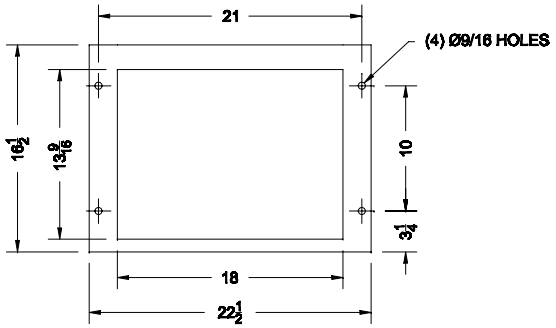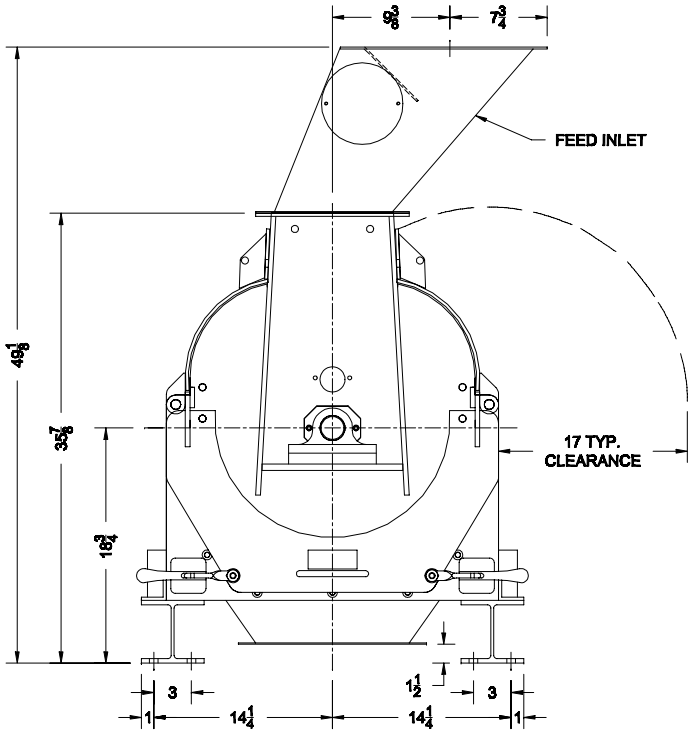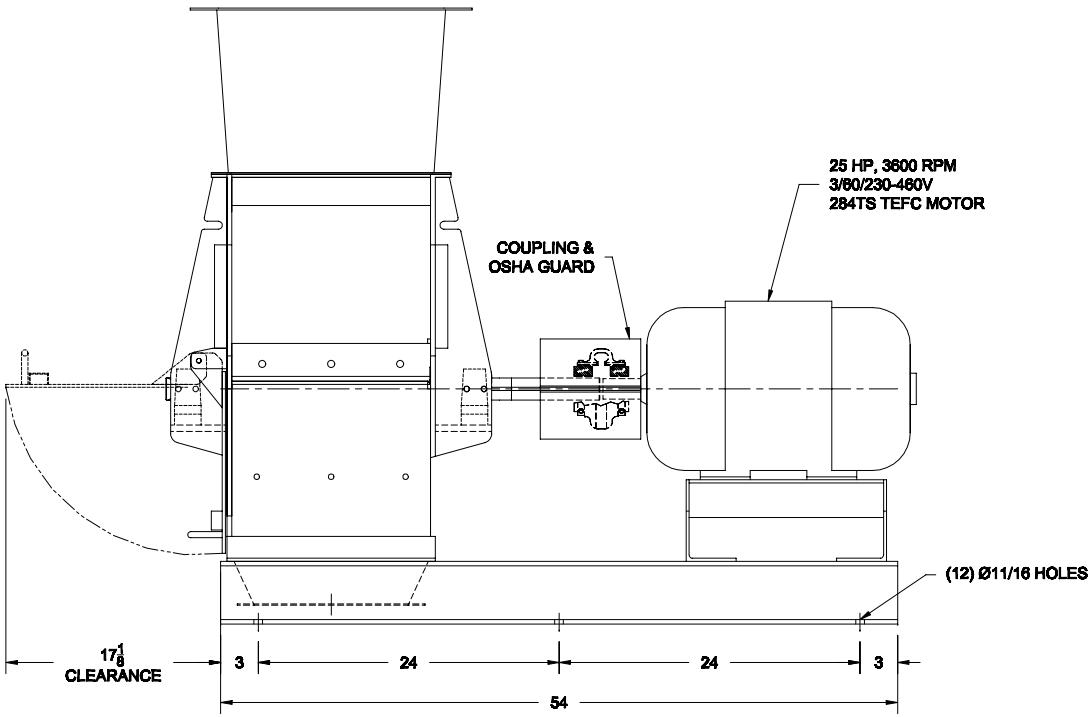
INLET FLANGE